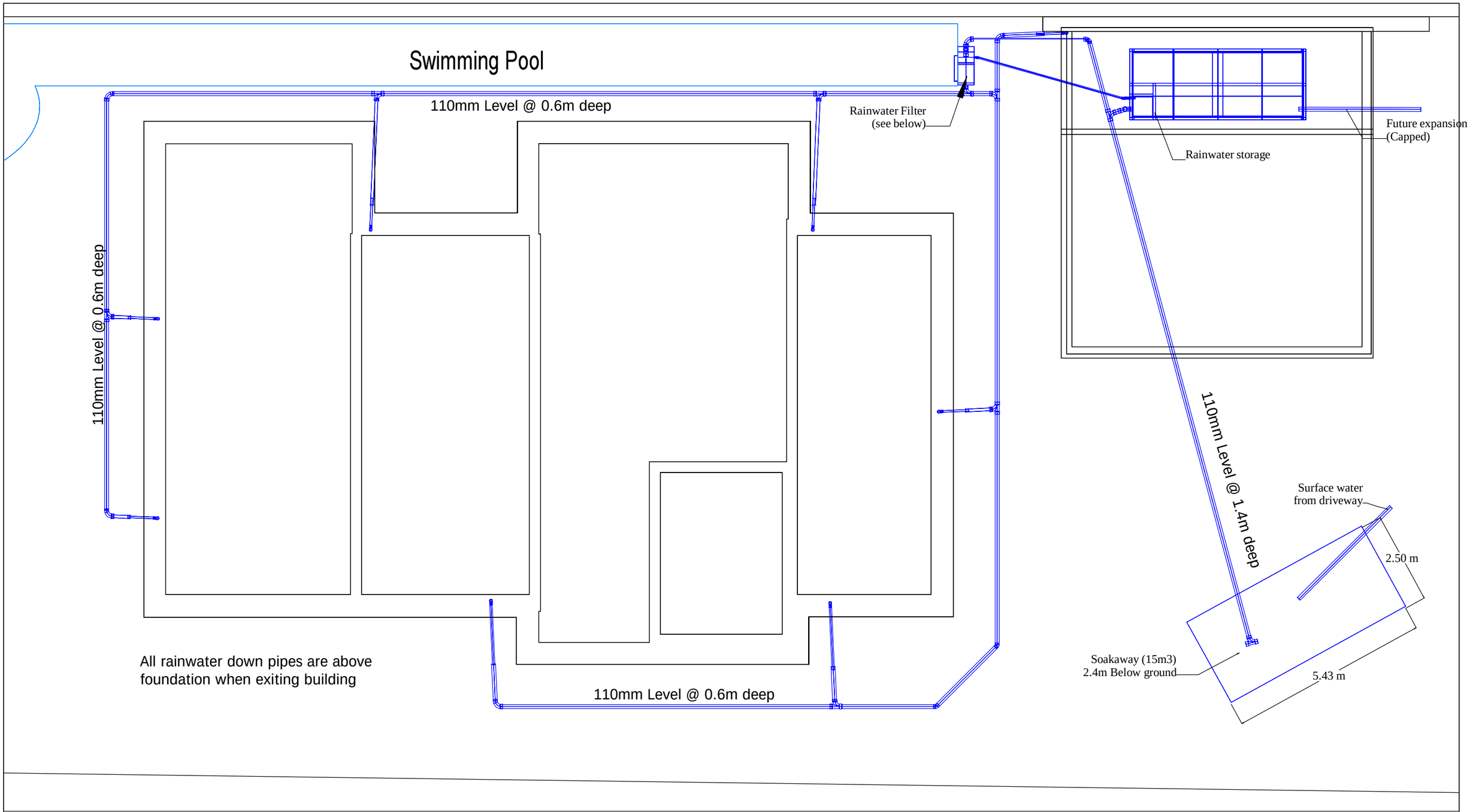

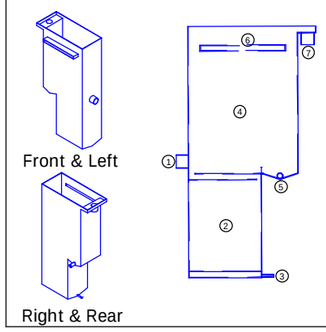

Rainwater filter operation

All rainwater from the roofs enters the filter from pipe 1, chamber 2 fills with first 200l of water (this emptys slowly via pipe 3 to soakaway). Chamber 4 then fills and emptys through a sand filter and out pipe 5 to the tank. If a heavy rainfall occurs then level in chamber 4 will rise to weir 6 (this connects to the swimming pool which has a surge storage of 90,000l). In an exceptional storm the level will reach the overflow pipe 7 which connects to the soakaway.

Rainwater tank has a capacity of 15,000l and fills from the filter, when full overflows to soakway.

Soakaway Calculations				Filtration depth		50%		max rain rate		0.02	
length m		5.4		Filtration area m2		8.69		roof area m2		430	
width m		2.5		f		0.00004		drive area m2		100	
depth m		1.1		Filtration rate m3/min		0.021					
volume m3		14.9									
void %		0.3		pond area m2		60					
Storage volume m3		4.46		storage depth m		0.15					
duration	z1	M5 rain	z2	M10 rain	roof inflow	surge storage	drive inflow	outflow	storage required	surplus storage	empty in hours
15	0.63	0.013	1.23	0.015	6.66	9	1.55	0.31	-1.10	5.55	-0.88
30	0.80	0.016	1.24	0.020	8.53	9	1.98	0.63	0.89	3.57	0.71
60	1.00	0.020	1.24	0.025	10.66	9	2.48	1.25	2.89	1.56	2.31
120	1.21	0.024	1.24	0.030	12.90	9	3.00	2.50	4.40	0.05	3.52

'Roselea' Smiths Loke

Bradwell, Gt. Yarmouth NR31 8DG

TITLE

Surface & Rain Water

SIZE	DATE	DRAWN BY	REV
A3	20/05/10	Stephen McGarry	1.0
SCALE		SHEET	3 of 4